INTRODUCTION TO FLUID MECHANICS

Department of Chemical Engineering

CHEM ENG 2O04
Course Notes

Conservation of Mass – Part I

Fox & McDonald

10th & 9th editions: 1.3, 4.3

“People will forget what you said.
People will forget what you did.
People will never forget how you made them feel.”

Maya Angelou

System vs Control Volume approach

- System:
  - Contains fixed quantity of mass:
    - For moving system, boundary also moves so that mass always remains the same
  - No mass crosses the system boundaries ("closed" system)

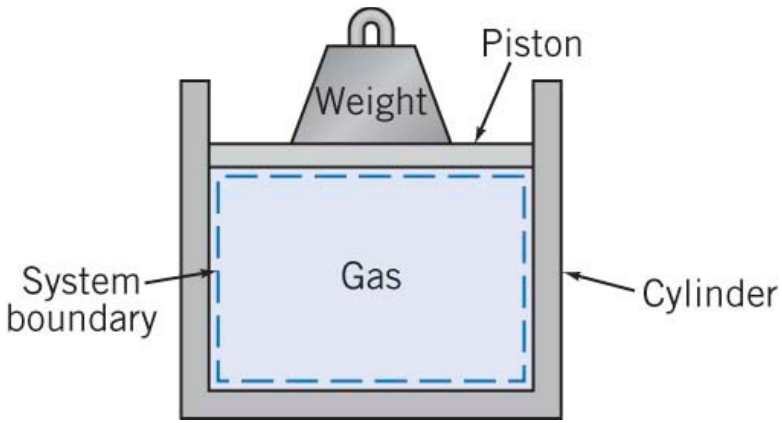

Figure 1.2

- Control volume (CV):
  - Arbitrary volume in space through which fluid flows ("open" system)
  - Control surface (CS) = boundary of the control volume:
    - Real or imaginary
    - Stationary or moving

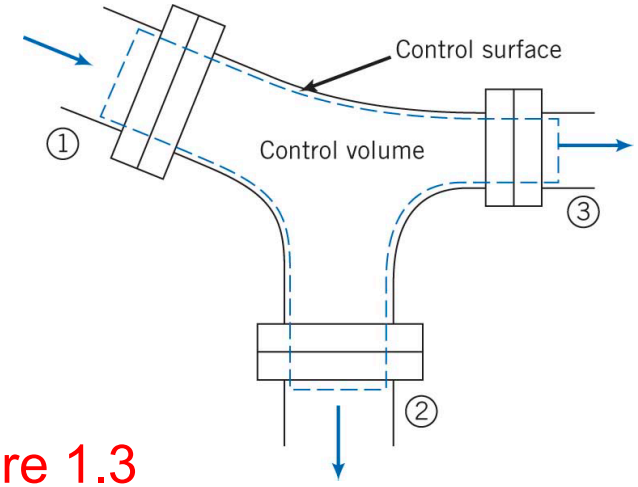

Figure 1.3

Axiom of Conservation of Mass

The total rate of mass flow **into** the control volume by any means **-** The total rate of mass flow **out of** the control volume by any means **=** The net rate of change in mass within the control volume

$$\sum(\dot{m}_{inlet}) - \sum(\dot{m}_{outlet}) = \frac{dm}{dt}$$

**Mass is neither created nor destroyed – valid for all cases except those involving nuclear reactions!*

Characterizing the Rate of Flow

- For a flow of fluid with a constant velocity V across a surface with area A, the volumetric flow rate Q can be calculated simply as:

$$Q = VA[=]\frac{m}{s}m^2[=]\frac{m^3}{s}$$

- In general, for a flow of fluid in which the velocity varies across the surface, the volumetric flow rate Q is obtained by adding up the volume flow rate through each differential element dA:

$$Q = \sum V_i dA_i = \int_A V dA$$

Dividing both sides by area A

$$V_{avg} = \frac{Q}{A} = \frac{1}{A}\int_A V dA$$

Average Velocity

Volume of fluid that passes section A-A in time Δt.

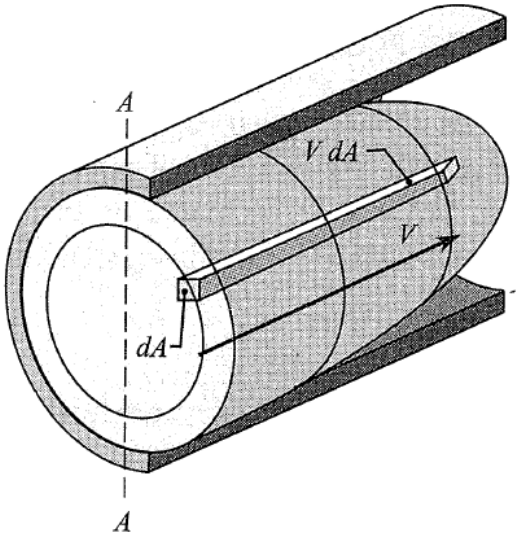

$$dA = r \cdot dr \cdot d\theta$$

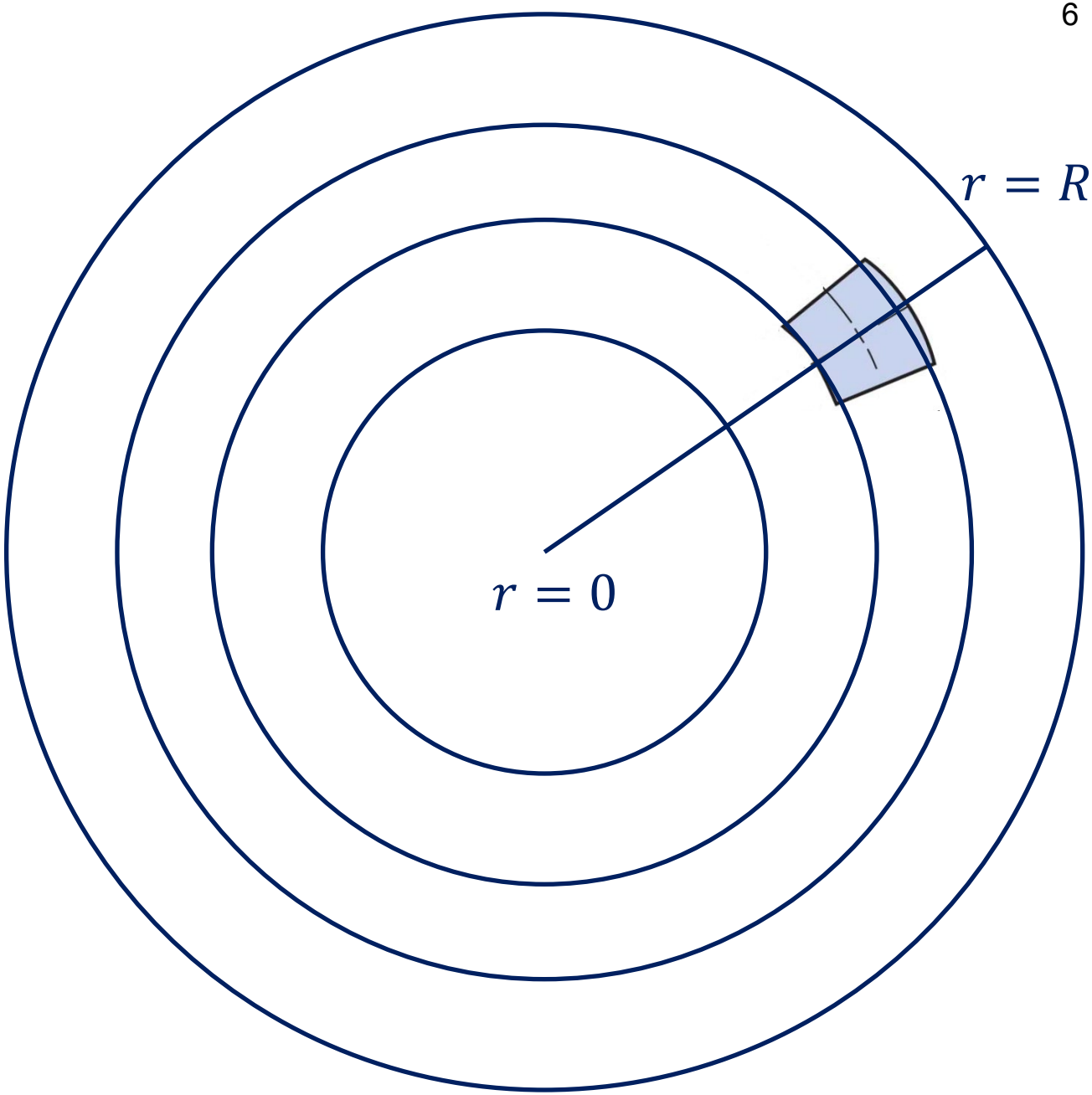

In-class problem

The velocity profile for the steady laminar flow of water through a pipe (with radius R) is defined by:

$$v_z(r) = v_{z,max}\left(1 - \frac{r^2}{R^2}\right)$$

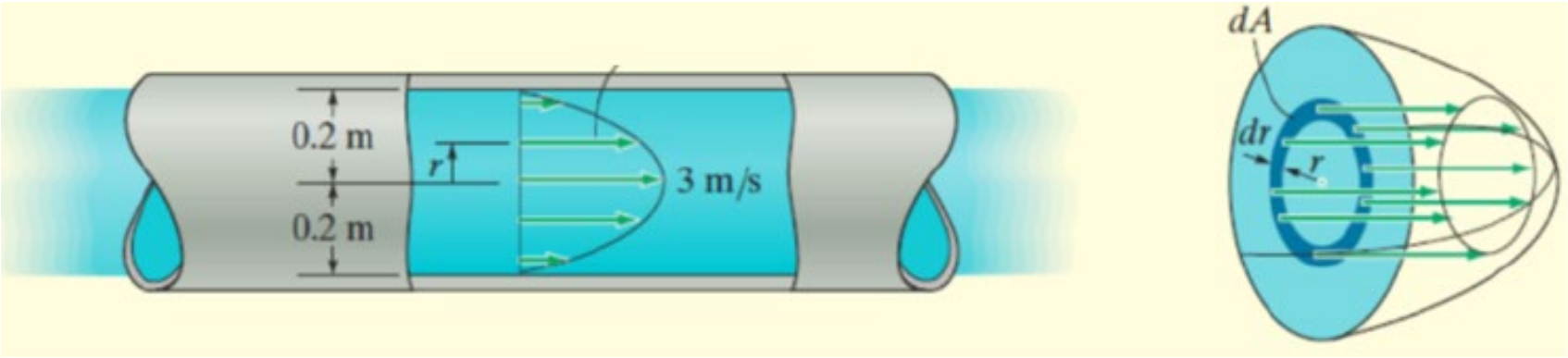

$$v_z(r) = 3\left(1 - \frac{r^2}{(0.2)^2}\right) = 3\left(1 - \frac{r^2}{0.04}\right)$$

1. Show that the given velocity profile satisfies the 'no-slip' condition at the wall (i.e. r = 0.2 m)
2. Prove that the maximum velocity occurs at the centerline
3. Determine the volumetric flow rate (Q) through the pipe **0.188 m³/s**
4. Determine the average velocity of the fluid in the pipe **1.5 m/s**

Steady-state mass balances

- Steady-state ≡ no property varies with time:

$$\sum(\dot{m}_{inlet}) - \sum(\dot{m}_{outlet}) = \cancel{\frac{dm}{dt}}^{\,0}$$

$$\sum(\dot{m}_{inlet}) = \sum(\dot{m}_{outlet})$$

- For special case where uniform velocity at each inlet and exit:

$$\sum(\rho VA)_{inlet} = \sum(\rho VA)_{outlet}$$

- For uniform fluid composition (constant density):

$$\sum(VA)_{inlet} = \sum(VA)_{outlet}$$

Steady-state mass balances

- For uniform fluid composition (constant density):

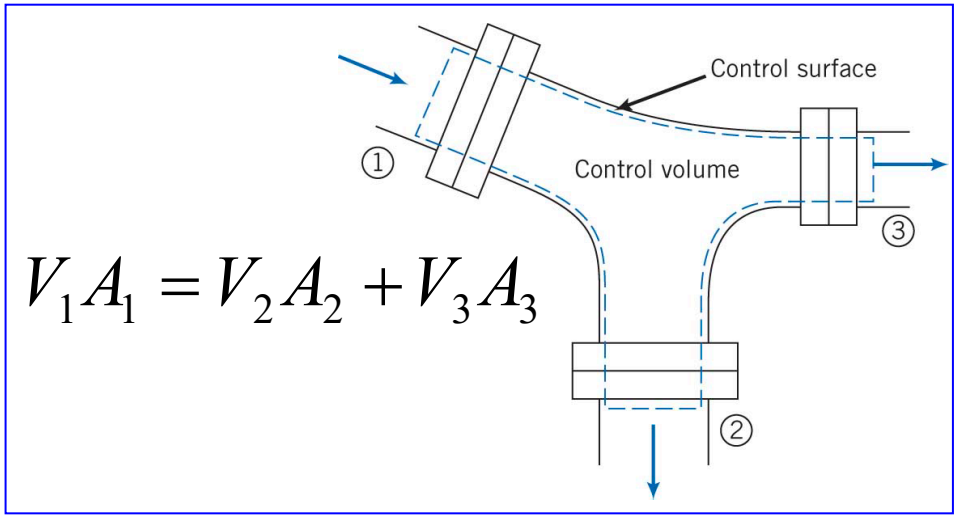

$$V_1 A_1 = V_2 A_2 + V_3 A_3$$

Figure 1.3

For self-study:

- Review Example 1.2 ‘Mass Conservation applied to a Control Volume’
- Review Example 4.1 ‘Mass Flow at a Pipe Junction’

Transient mass balances

$$\sum(\dot{m}_{inlet}) - \sum(\dot{m}_{outlet}) = \frac{dm}{dt}$$

Transient mass balances

$$\sum(\dot{m}_{inlet}) - \sum(\dot{m}_{outlet}) = \frac{dm}{dt}$$

Liquids (constant ρ)

$$\frac{d}{dt}(\rho \forall)$$

$$\rho \frac{d\forall}{dt}$$

Constant A_C

$$\rho A_C \frac{dh}{dt}$$

e.g. Vertical Cylindrical Tank

$$\rho \pi r_{\text{tank}}^2 \frac{dh}{dt}$$

Variable A_C

(i.e. Ac depends on h)

$$\rho \frac{d\forall}{dh}\frac{dh}{dt}$$

"chain rule"

Transient mass balances

- Common geometries with varying cross-sectional area A_C

Conical Tank

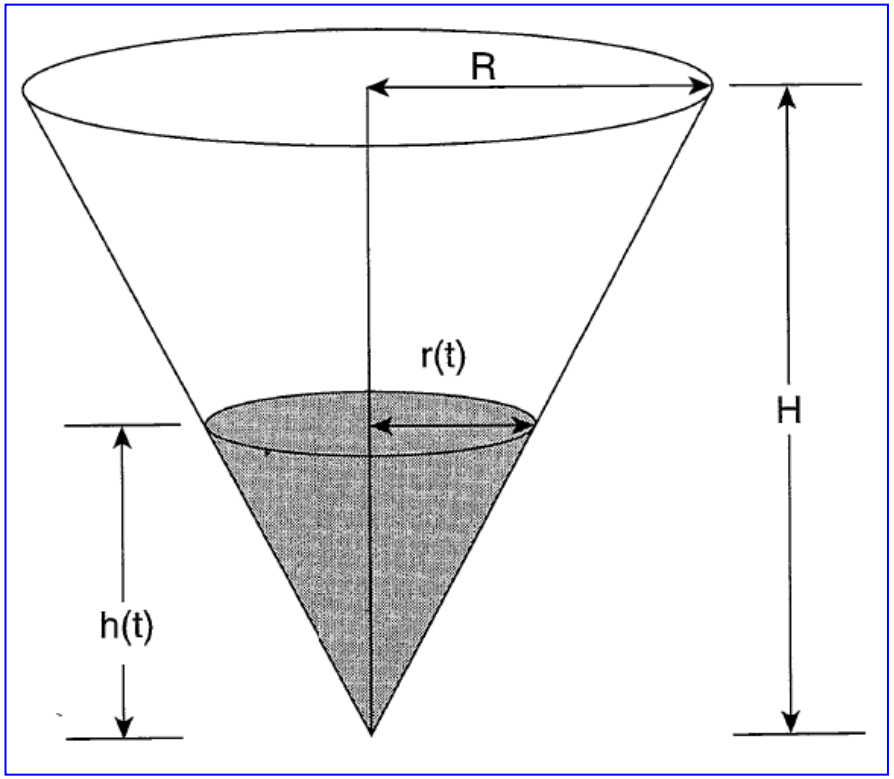

Transient mass balances

- Common geometries with varying cross-sectional area A_C

Spherical Tank

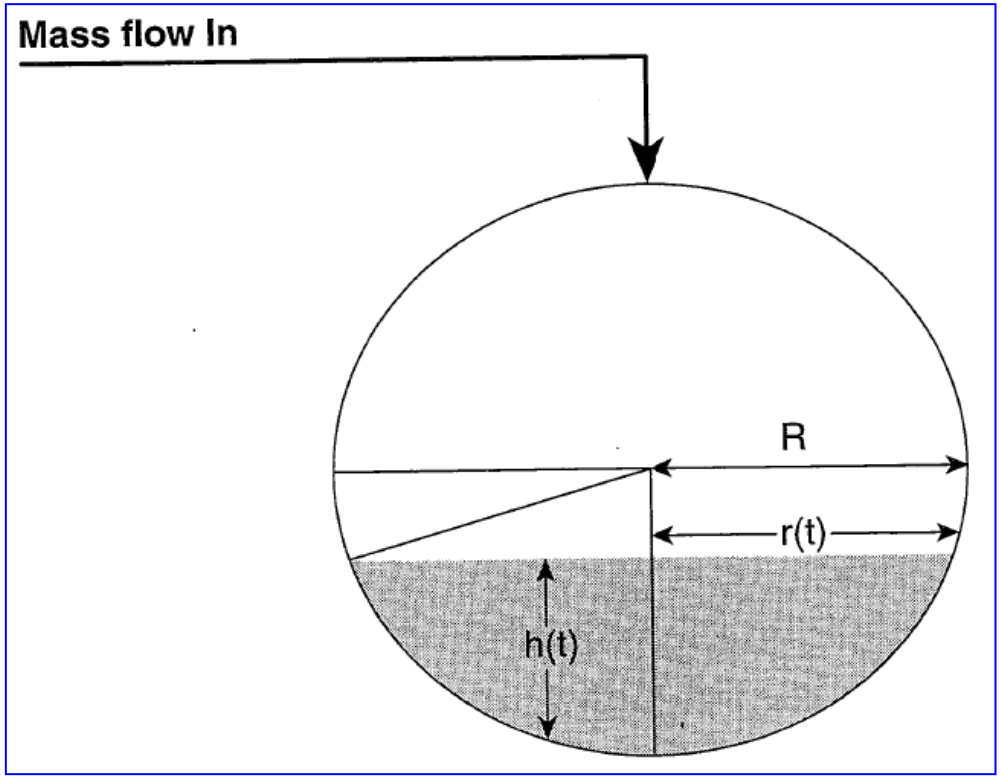

Transient mass balances

- Common geometries with varying cross-sectional area A_C

Rectangular Trough

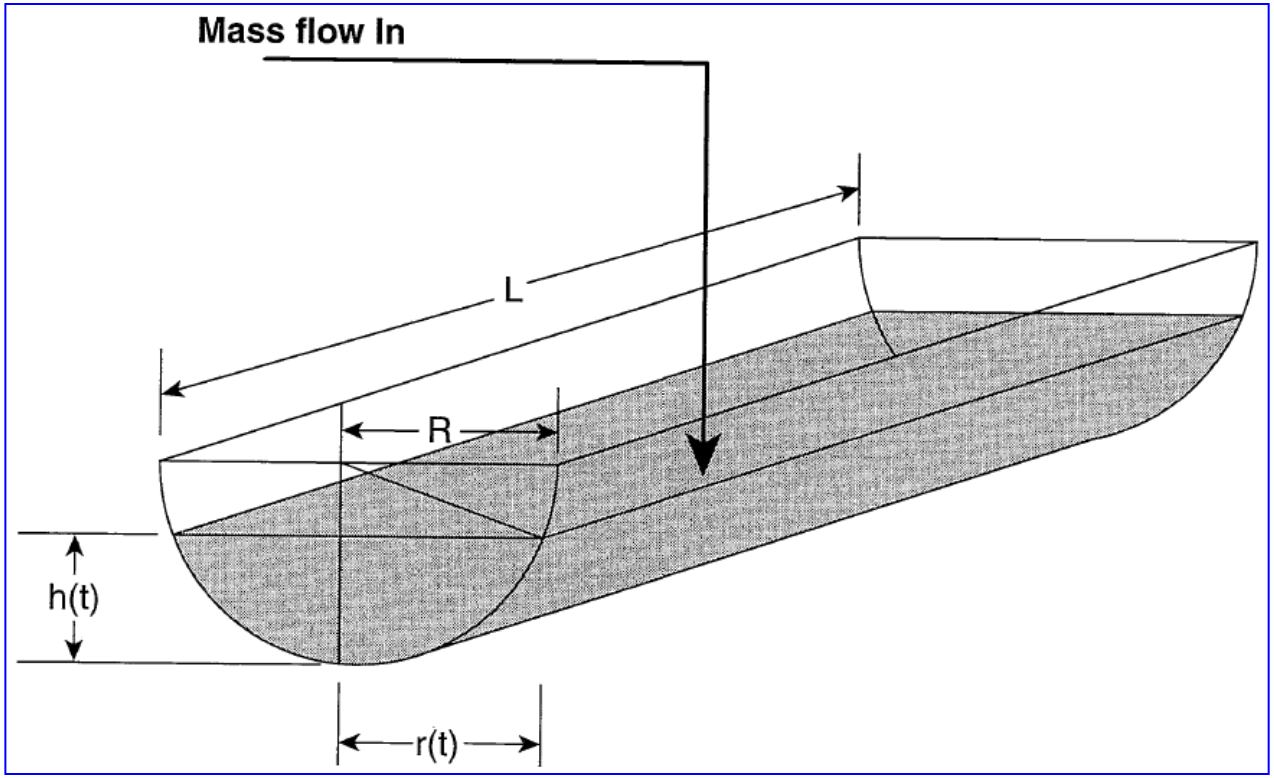

Transient mass balances

$$\sum(\dot{m}_{inlet}) - \sum(\dot{m}_{outlet}) = \frac{dm}{dt}$$

$$\frac{d}{dt}(\rho \mathcal{V})$$

Liquids (constant ρ)

$$\rho \frac{d\mathcal{V}}{dt}$$

Constant A_C

$$\rho A_C \frac{dh}{dt}$$

e.g. Vertical Cylindrical Tank

$$\rho \pi r_{\text{tank}}^2 \frac{dh}{dt}$$

Variable A_C

(i.e. Ac depends on h)

$$\rho \frac{d\mathcal{V}}{dh}\frac{dh}{dt}$$

Ideal Gas

$$\frac{d}{dt}\left(\frac{M_W P}{R_U T}\mathcal{V}\right)$$

Single Gas or Fixed Composition

$$\frac{M_W}{R_U}\frac{d}{dt}\left(\frac{P}{T}\mathcal{V}\right)$$

Fixed volume Isothermal

$$\frac{M_W \mathcal{V}}{R_U T}\frac{dP}{dt}$$

In-class problem (on 2024 midterm #1)

Spherical tanks (like the one shown in the accompanying figure) are often used for the storage of cryogenic fluids and specialty fuel products.

a. For the situation of filling an empty spherical tank (of radius R) with a specialty liquid at a fixed rate ($\dot{m}_{inlet}$), determine the general equation for the height of liquid in the spherical tank.

b. Prove that your answer from part a is correct by showing that when it is used to calculate the time to completely fill the spherical tank that it matches the equation shown below:

$$t_{full} = \frac{{}^{4}/_{3}\,\pi R^3}{Q_{inlet}}$$

Problems from textbook for self-study

10th Edition	9th Edition
4.5	4.13
4.9	4.26
4.10	4.32
4.11	4.28
4.12	4.40